Western Electric

270A Vacuum Tube

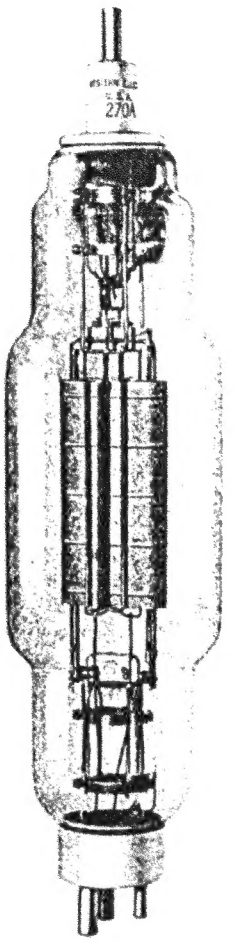

Classification—Filamentary air-cooled triode

May be used as an audio-frequency amplifier or as a radio-frequency amplifier, modulator or oscillator.

Dimensions—Dimensions and outline diagrams are shown in Figure 1. The overall dimensions are

Maximum overall length	17″
Maximum diameter	4″

Mounting—The method of supporting the tube shown in Figure 1 is recommended and sufficient dimensions are given for designing a suitable mounting. The tube should preferably be mounted in an upright or vertical position.

Copyright 1936 Western Electric Company, Incorporated

Filament—Thoriated tungsten

Filament voltage	10 volts, a.c. or d.c.
Nominal filament current	9.75 amperes
Average thermionic emission	4.0 amperes

Average Direct Interelectrode Capacitances

Plate to grid	21.0 $\mu\mu$f.
Grid to filament	18.0 $\mu\mu$f.
Plate to filament	2.0 $\mu\mu$f.

Characteristics—Performance data given below are based upon a typical set of conditions. Variations can be expected with different circuits and tubes.

Figures 2 and 3 give the static characteristics of a typical tube plotted against grid and plate voltages.

Average Characteristic at maximum direct plate voltage and dissipation — Class A ($E_b = 2500$ volts, $I_b = 120$ milliamperes)

Amplification factor	16
Plate resistance	2800 ohms
Grid to plate transconductance	5700 micromhos

Operation

Maximum Ratings

Max. direct plate voltage	3000 volts
Max. direct plate current	375 milliamperes
Max. plate dissipation	350 watts
Max. direct grid current	75 milliamperes
Max. r-f grid current	10 amperes
Max. frequency for the above ratings	7.5 megacycles
Max. plate voltage for upper frequency limit of 22.5 Mc	1000 volts
Max. plate voltage for frequencies between 7.5 and 22.5 Mc in proportion	

Class A Audio Amplifier or Modulator

Direct plate voltage	2500	2000 volts
Grid bias	−130	−95 volts
Direct plate current	120	150 milliamperes
Plate dissipation	300	300 watts
Load impedance	15,000	10,000 ohms
Undistorted output	90	70 watts

Class B Audio Amplifier or Modulator for Balanced 2 Tube Circuit

Direct plate voltage	2500	2000 volts
Grid bias	−140	−105 volts
Direct plate current per tube		
No drive	60	60 milliamperes
Max. drive	375	375 milliamperes
Load resistance, plate-to-plate	8000	6000 ohms
Load resistance, per tube	2000	1500 ohms
Plate dissipation	350	350 watts
Approx. max. output—2 tubes	1000	850 watts
Recommended power for driving stage	75	75 watts

Grid Bias Modulator

Direct plate voltage	3000 volts
Direct plate current	75 milliamperes
Grid bias	−200 volts
Load impedance	7000 ohms
Peak power output	250 watts

Class B Radio-Frequency Amplifier

Direct plate voltage	3000	2500 volts
Direct plate current for carrier conditions	175	210 milliamperes
Grid bias	−180	−140 volts
Approximate carrier watts for use with 100% modulation	175	175 watts

Class C Radio-Frequency Oscillator or Power Amplifier—Unmodulated

Direct plate voltage	3000	2500 volts
Direct plate current	350	350 milliamperes
Grid bias	−315 to −420	−255 to −340 volts
Nominal power output	700	585 watts

Class C Radio-Frequency Amplifier—Plate Modulated

Direct plate voltage	2250	1750 volts
Direct plate current	300	350 milliamperes
Grid bias	−300	−240 volts
Maximum direct grid current	80	80 milliamperes
Nominal carrier power output for use with 100% modulation	450	410 watts

Operating Precautions

Mechanical—Figure 1 shows the overall dimensions and basing arrangement for the tube.

The tubes should not be subjected to mechanical shock or excessive vibration. Mechanical vibration may cause breakage of the thoriated tungsten filaments.

A free circulation of air must be provided to insure adequate cooling of the glass during operation.

Electrical—Overload protection should always be provided for the plate circuit. A suitable fuse or circuit breaker should remove the plate voltage if the plate current exceeds 400 milliamperes. Although the tube is sufficiently rugged to withstand momentary overloads, a prolonged overload caused by inefficient adjustment of the circuit, may damage the tube. When adjusting a new circuit, reduced plate voltage or a series resistance of 1000 to 5000 ohms in the plate circuit should be used until it is operating properly.

The filament should always be operated at the rated voltage, measured at the tube terminals. A 5% decrease in filament voltage reduces the thermionic emission approximately 25%. Either direct or alternating current may be used for heating the filament. If direct current is used, the plate and grid circuit returns should be connected to the negative filament terminal. If alternating current is used, the circuit returns should be connected to the center tap of the filament heating transformer winding or to the center tap of a resistor placed between the filament terminals. A resistance of 20 to 30 ohms of three watt rating is suitable.

In cases where severe and prolonged overload has temporarily impaired the electronic emission of the filament, the activity may be restored by operating the filament, with the plate and grid voltages off, 30% above normal voltage for 10 minutes followed by a longer period at normal voltage.

Audio Amplifier or Modulator

Class A—Peak grid drive equal to or less than the grid bias.

Grid bias may be obtained from the drop across a resistance in the plate current return or from a battery or rectifier supply.

Plate dissipation allowable for this type of service is generally lower than is safe for other uses since the energy is dissipated in the plate in smaller areas due to relatively high voltage drop in the tube.

The plate dissipation is equal to the plate voltage multiplied by the normal plate current. Performance data are based upon the use of a resistance load. Undistorted output is calculated on the basis of 5% second harmonic distortion.

Class B—Grid bias practically at cut-off and grid driving voltage higher than the bias.

Two tubes may be used in a balanced circuit. An adequate driving stage and an input transformer with good regulation must be used so that the grid current drawn during positive grid swings does not produce appreciable distortion. The output transformer must transform the load impedance to the proper value for the tubes used. The power output obtainable will be determined by the quality of the transformer used and the amount of distortion which can be tolerated. The grid bias must be held constant and therefore can not be obtained by grid leak or series resistor methods. A battery or other source having good regulation is necessary.

The power required of a modulator for complete modulation of a Class C amplifier is one-half the direct power input to the plates of the Class C amplifier.

Radio-Frequency Oscillator or Power Amplifier

Class B—Radio-Frequency Amplifier

The Class B radio-frequency amplifier is used to amplify a modulated radio-frequency carrier wave without appreciable distortion. It operates similarly to the Class B audio amplifier except that a single tube may be used, the tuned output circuit serving to preserve the wave shape. The push-pull circuit, however, eliminates the even order harmonics and thus increases the efficiency slightly.

Class C—Radio-Frequency Oscillator or Power Amplifier—Grid bias below cut-off

Unmodulated

This type of operation is suitable for telegraphy, or the production of a continuous flow of radio-frequency power for purposes other than communication.

Plate Modulated

This type of operation is for use when the modulating voltage is superimposed on the plate supply voltage and to obtain good quality the output power should vary as the square of the plate voltage. For complete or 100% modulation, the plate voltage varies from zero to twice the applied direct value during a cycle of the audio frequency. With no modulation applied, the plate voltage is, of course, the direct value and the carrier power output is one-fourth of the peak power output under 100% modulation. In this case, since the plate voltage varies with modulation, the direct value must be rated lower than for other types of operation.

High Frequency Ratings

The frequency limits specified under maximum ratings are based on the tube being used on an oscillator. The tube may be used at full rating up to 7.5 megacycles. When operating at higher frequencies, the dielectric losses, charging currents, and lead-in heating are increased greatly. The plate voltage and hence plate dissipation must be reduced to values specified for the upper frequency limit and for frequencies between these two limits the plate voltage should be proportionately reduced.

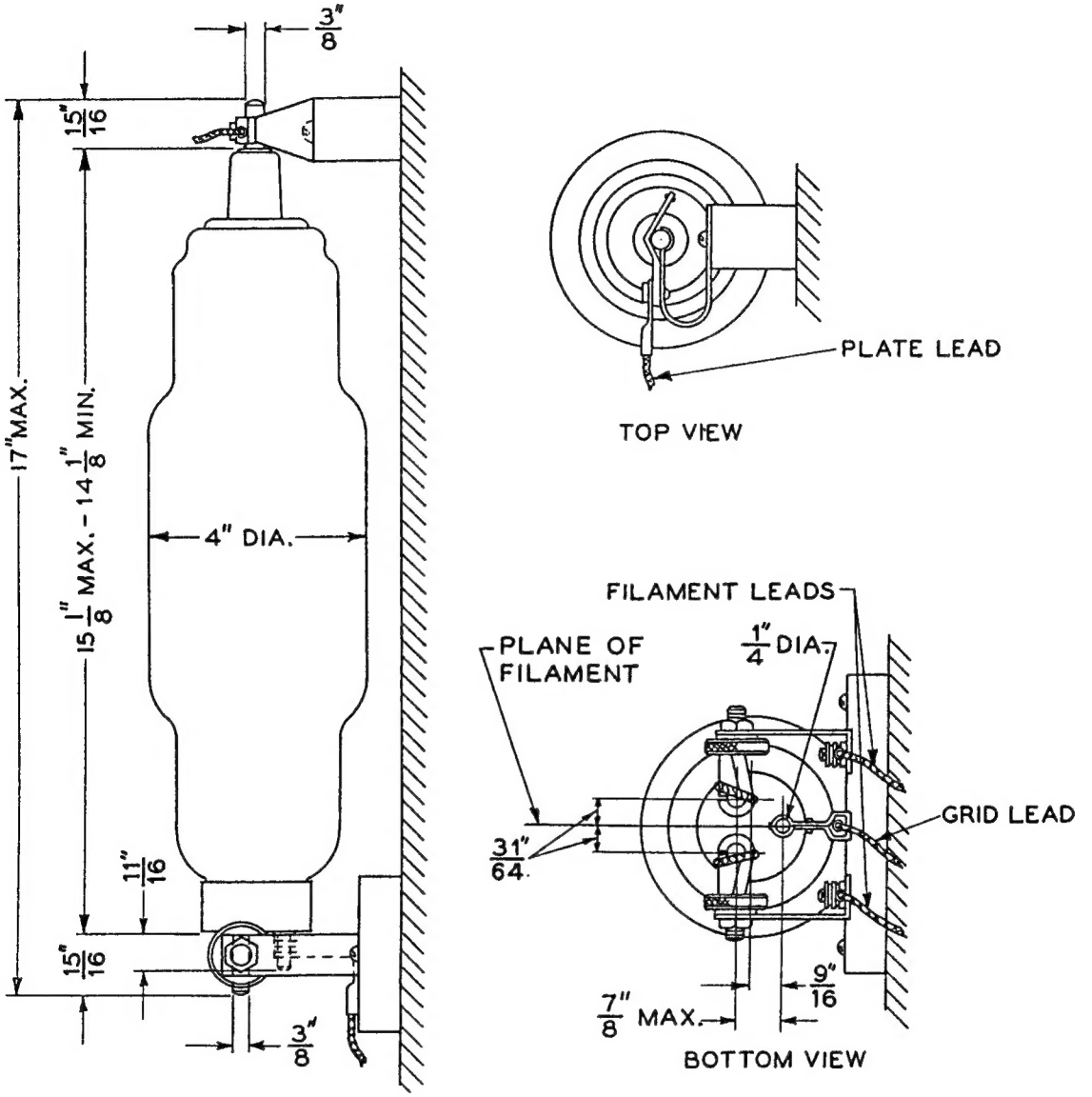
3/8"
15/16"
17" MAX.
15 1/8" MAX. - 14 1/8" MIN.
4" DIA.
11/16"
15/16"
3/8"
PLATE LEAD
TOP VIEW
FILAMENT LEADS
PLANE OF FILAMENT
1/4" DIA.
GRID LEAD
31/64"
7/8" MAX.
9/16"
BOTTOM VIEW

FIG. 1

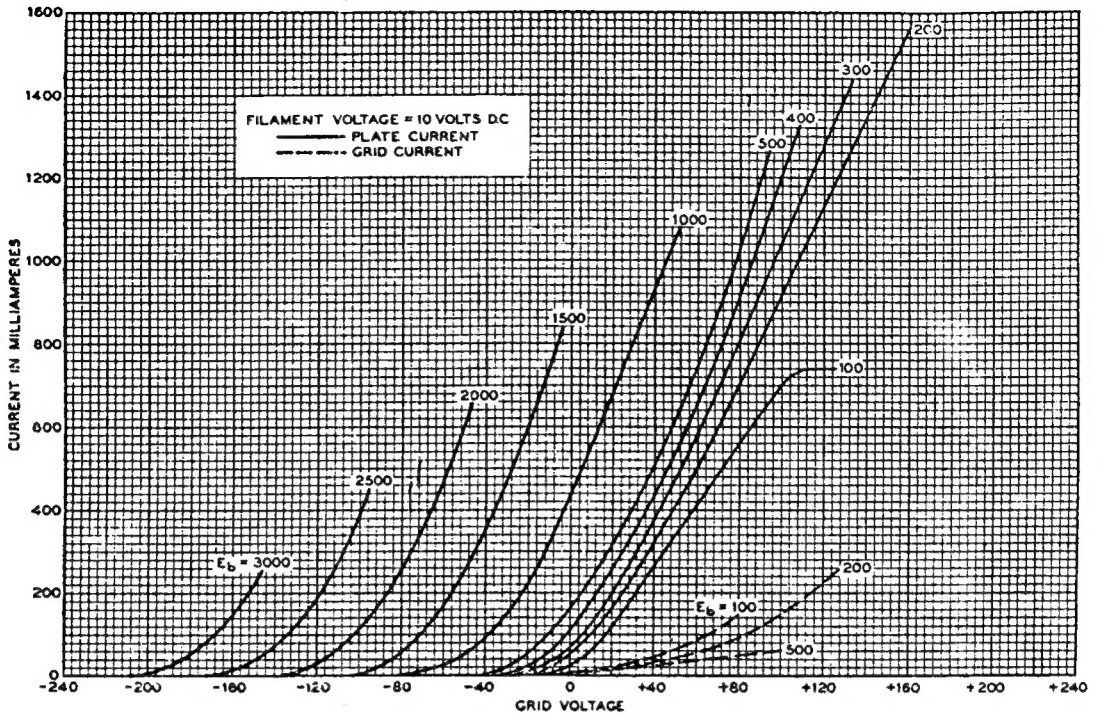

FIG. 2

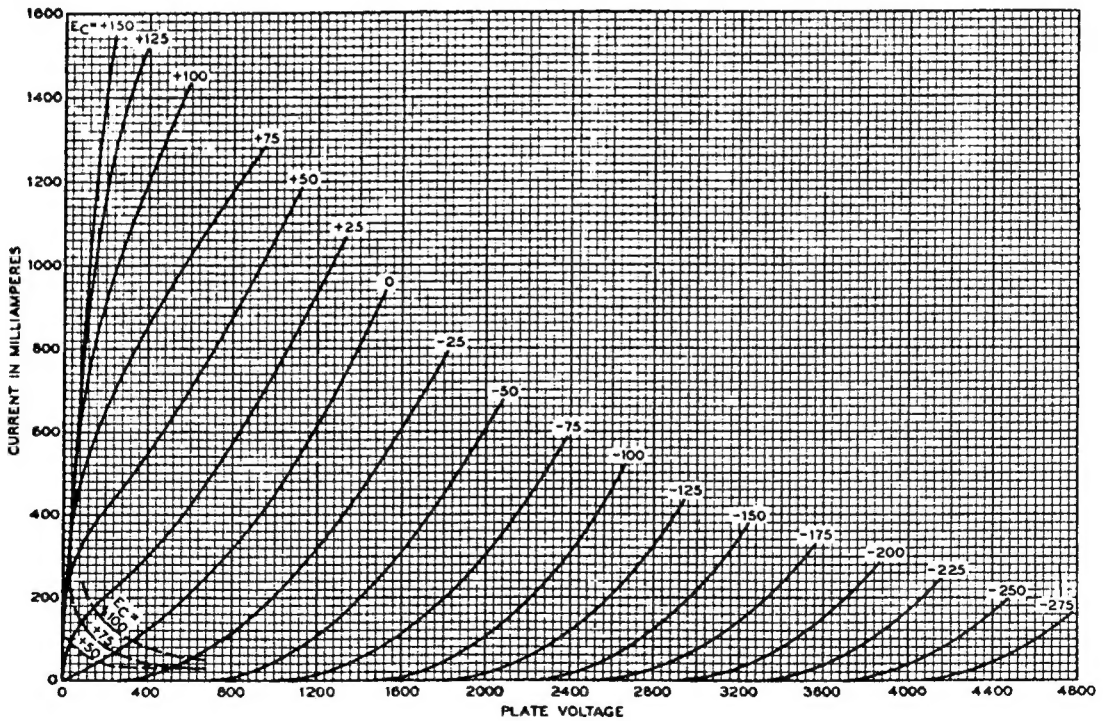

FIG. 3

1-B-36-53C
PRINTED IN U.S.A.

A development of Bell Telephone Laboratories, Incorporated, the research laboratories of the American Telephone and Telegraph Company, and the Western Electric Company

V. T. DATA SHEET 270A
ISSUE 1